CATALOGUE OF REPLACEMENT PARTS WITH INSTRUCTIONS FOR OPERATION AND CARE OF:

Model . . No. 110 MEAT SLICERS

THE HOBART MANUFACTURING CO.
TROY, OHIO, U. S. A.

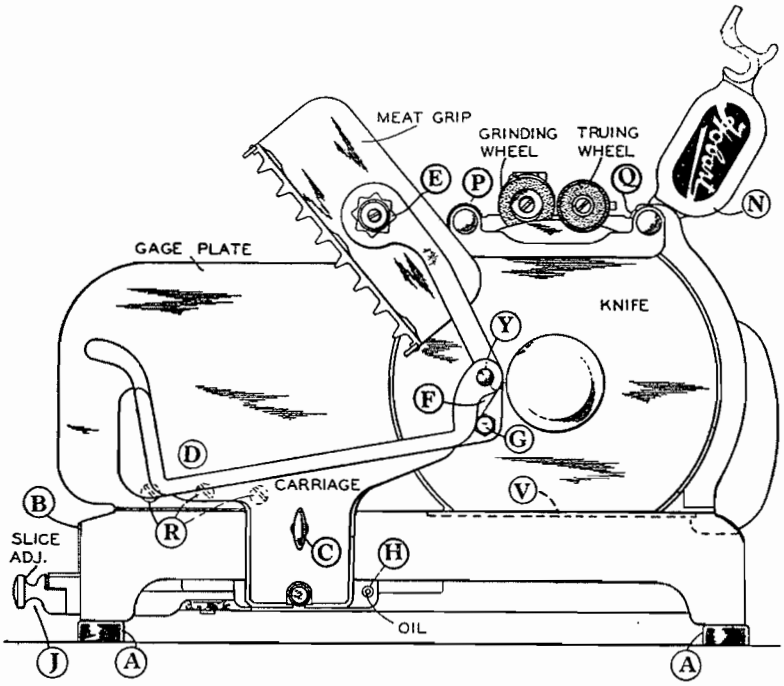

Fig. 1

Instructions For Hobart Slicer

MODEL 110

1 — INSTALLATION See that the four rubber feet (A) are in place. They are packed in a small cloth bag that is included with the shipment, and they may be inserted by twisting to the right, just as though they were screws. For installation on shipboard omit the rubber feet and secure the machine to the table with ½″ — 13 cap screws.

The electrical specifications for the motor will be found on the plate B at the slice adjusting end; be sure that they agree with those of the electric service before plugging into a socket the first time.

When the slice adjusting lever is at zero the gage plate should be flush with the face of the knife; if by any chance it is not, see "Adjustment of Zero Point" under paragraph 7.

The thumb screw C that holds the carriage in place is drawn up very tight before shipment and a wrench may be needed to loosen it the first time. When in service keep this screw as tight as you can turn it with your fingers.

2 — SLICING FOODS Lay the bacon, or material to be sliced, in the meat trough D, set the slice adjustment to the desired figure, and switch on the motor. When slicing, stand at the slice-adjustment end, grasp the meat grip handle E with your right hand and with it feed the food toward the gage plate and also move the carriage back and forth across the revolving knife. Your left hand will thus be free to arrange the slices on the receiving tray, as they come from the knife.

When slicing a long piece of meat set the grip on top of it, but when the pieces are short (Three or four inches) hold the grip behind the meat. You can then slice down to the last slice.

When desirable, the meat grip may be latched up by hooking the finger F under the stud G as shown in Fig. 1.

A popular setting for slicing bacon is about No. 10 on the scale, but of course, this can be varied to suit the preference of your customers. After slicing an order always set the lever back to zero, for in that position the knife is fully guarded.

3 — REMOVING CARRIAGE Loosen the thumb screw C, and lifting the carriage straight up, remove it from the machine. When this is done a smooth working-table is exposed which facilitates de-crusting loaves of bread, and de-rinding slabs of bacon.

4 — CLEANING Wipe off the entire exposed surface of the machine, daily, with a cloth moistened with warm water. Once a week, polish the machine with Old Dutch Cleanser, Bon Ami, Electro Silicon, or some similar preparation.

With the knife running, all guards in place, and the adjusting lever at zero, hold the cloth against the front surface of the knife and then against the back surface, for cleaning. Form the cloth into a large, loose pad for doing this and be careful not to let a stray end catch in the cutting edge.

Lift the polished plate V that is in front of the knife and wipe off any food that may cling to the edge next to the knife. The motor must not be running when this plate is lifted and the plate must always be down in place when wiping out back of the knife.

The slice deflector may be swung out to give better access to the space back of the knife, or it may be removed entirely by lifting it upward.

5 — SHARPENING This machine is equipped with a Hobart Stay Sharp Stainless Steel Knife, made and guaranteed by the Hobart Mfg. Co. It should be sharpened **only when dull.** For average use, sharpening once a week will be sufficient; do not sharpen more often unless it is absolutely necessary.

The knife grinding attachment can be operated only when the housing is open. Loosen the two thumb screws P, and Q, half a turn each, and swing up the cover N as shown in Fig. 1. Always wipe off the knife before and after sharpening.

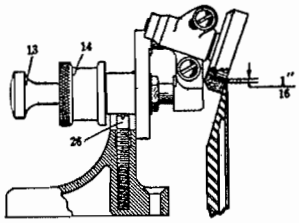

Fig. 2

To sharpen the knife, start the motor and then press the knob 13 (Fig. 2). Use a moderate pressure and hold the grinding wheel against the knife for several seconds. The time required for grinding depends upon the condition of the knife. Then pull out on the knob 13 so that the truing wheel touches the knife for about one second. Then press the grinding wheel into contact again momentarily.

If you will loosen the large nut 14, the entire grinding wheel assembly can be removed from its housing. It is a good plan to keep it out except when sharpening the knife. This will help to keep it clean and prevent over-sharpening.

In time, the grinding surface of the sharpening stones may become filled with metal or tallow. To correct such a condition, remove the stones and scrub their grinding surfaces with a stiff brush and ammonia or gasoline. After a thorough cleaning allow the stones to dry for several hours before placing them back on the sharpener.

6 — LUBRICATION Very little lubrication will be needed. The carriage slideways are oiled by a system of wicks; add a few drops of oil once a month at H. A few drops of oil will be needed on the slide rod Y also.

Never use machine oil about a slicer; use only tasteless, odorless slicer oil. If unable to obtain it locally order your supplies from us.

The motor bearings and the knife shaft bearings are packed in grease and will not need additional lubricant the first year. Consult a Hobart Service man before adding grease.

7 — ADJUSTMENTS

(A) To Adjust Zero Point When the slice adjusting lever J is at the extreme right or zero position the gage plate should lie in the same plane as the face of the knife. If it does not, adjust as follows. First, turn the machine up on its side to expose the underneath parts, then loosen the screw L shown in Fig. 3. Move the gage plate up to the level of the knife face, and the lever to zero, then tighten screw L.

(B) To Take Up Looseness in Gage Plate Turn the machine on its side, loosen the three screws K slightly and then turn each of the two screws M a fraction of a turn to take up the looseness. Be sure to tighten the screws K again. (See Fig. 3).

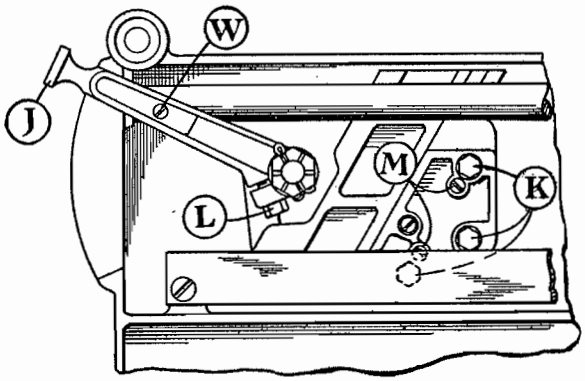

Fig. 3

(Continued on Page 12)

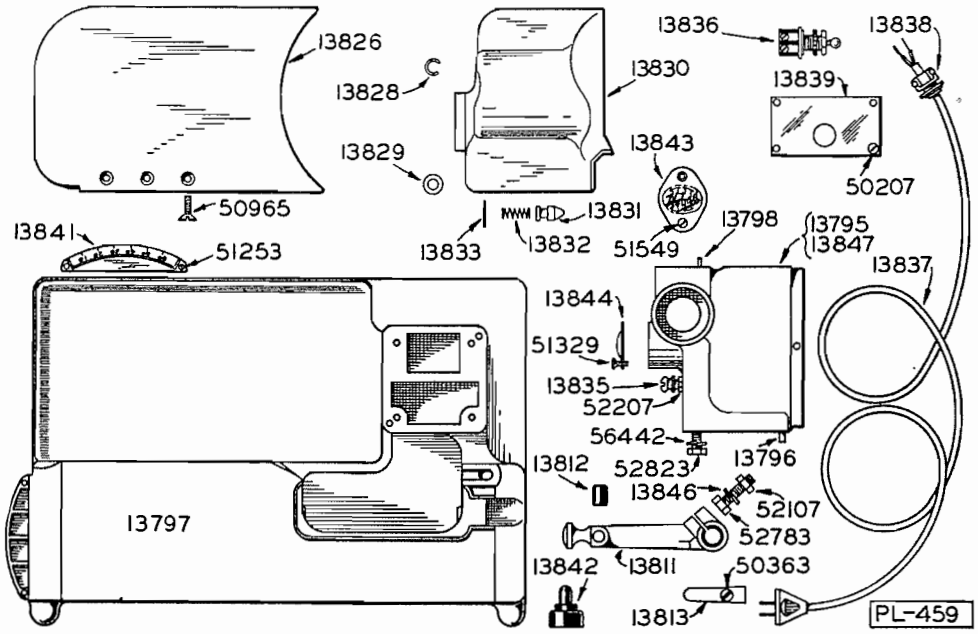

Parts for Base Unit Part One

Catalog No.	Name of Part	No. Req.	Factory No.	Code Word
13 795	Motor Frame for A.C. machine only	1	T-14145	Caint
13 796	Dowel, motor frame to Base	2	P-11800-90	Caiou
13 797	Base and Receiving Pan	1	T-14116	Caipv
13 798	Dowel, grinder pedestal to motor frame	2	P-11800-88	Cairx
13 811	Adjusting Handle	1	R-14115	Cajfy
13 812	Shoe for Adjusting Handle	1	V-14222	Cajha
13 813	Flat Spring for Adjusting Handle	1	V-14592	Cajib
13 826	Gage Plate	1	S-17309	Cakgn
13 828	Friction Ring for Hinge Pin	1	V-15591	Cakip
13 829	Washer for Hinge Pin	1	7660-G-99	Cakkr
13 830	Deflector	1	S-14124	Caknu
13 831	Plunger	1	V-13289	Cakov
13 832	Spring for No. 13831	1	V-3605	Cakry
13 833	No. 000000 Groov-Pin (Type GG-P-1) ⅝" long	1	--------	Caksz
13 835	Stop Stud	1	M-10941	Cakub
13 836	Switch, C.H. No. 8224, 5A-250V	1	--------	Cakxe
13 837	Cord and Plug	1	M-14144-2	Cakyf
13 838	T & B Tite Bite Connection for Cord	1	--------	Calau
13 839	Switch Box Lid	1	M-15584	Caley
13 841	Slice Indicator Plate	1	M-14220	Calic
13 842	Rubber Foot for Base	4	M-14203	Calke
13 843	Knife Shaft Cap	1	M-14193	Caloi
13 844	Rotor Shaft Bearing Cap	1	M-14204	Calsm
13 846	Lockwasher 5/16" x ⅛" x ⅛"	1	--------	Caluo
13 847	Motor Frame for D.C. machine only	1	P-14703	Calys

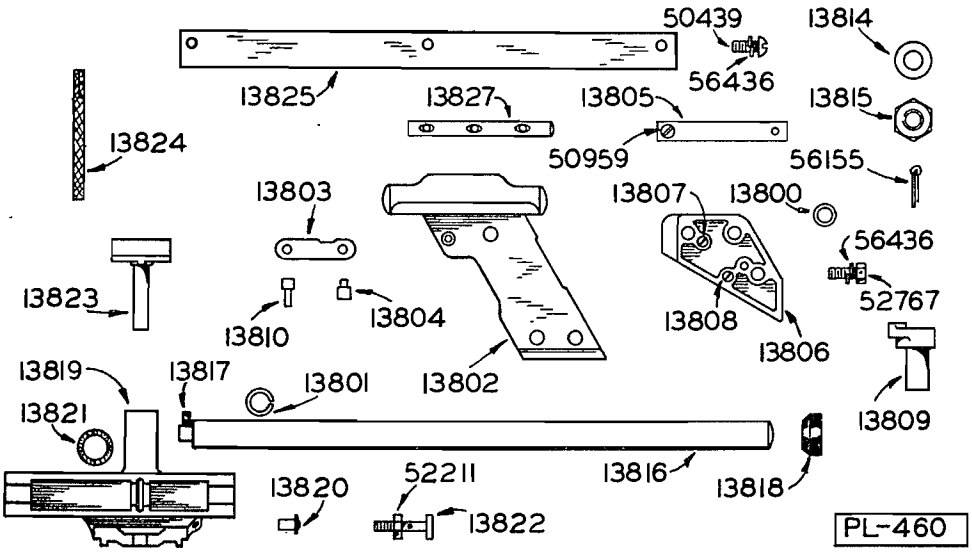

Parts for Base Unit Part Two

Catalog No.	Name of Part	No. Req.	Factory No.	Code Word
13 800	Shim Washer	--	V-13489	Caitz
13 801	Flat Spring Washer	1	M-14461-3	Caiua
13 802	Gage Plate Base	1	R-14113	Caivb
13 803	Link for Adjusting Arm	1	V-14134	Caiwc
13 804	Stud for Gage Plate Base	1	V-14135	Caixd
13 805	Retaining Strip for Gage Plate Base	1	V-14140	Caiye
13 806	Clamp for Gage Plate Base	1	R-14179	Caizf
13 807	Clamp Adjusting Screw in No. 13806	2	V-14600	Cajat
13 808	Plug in No. 13806	1	V-7711-2	Cajbu
13 809	Adjusting Arm	1	M-14112	Cajdw
13 810	Adjusting Arm Pin	1	V-14216	Cajex
13 814	Adjusting Arm Washer	1	V-14129	Cajle
13 815	Nut for Adjusting Arm Shaft	1	V-14198	Cajng
13 816	Slide Rod	1	P-14130	Cajoh
13 817	Special Stud for No. 13816	1	V-14239	Cajpi
13 818	Rubber Bumper on Slide Rod	2	V-13162-1	Cajsl
13 819	Carriage Bearing, front	1	S-14123	Cajtm
13 820	Oiler, style "GB" No. 522	1	--------	Cajun
13 821	Felt Washer, ⅞" ID x 1⅛" OD x 3/16"	1	--------	Cajvo
13 822	Stud for Carriage Tray	1	V-14138	Cajyr
13 823	Carriage Bearing, rear	1	M-14114	Cakah
13 824	Wicking for Carriage Bearing	1	V-14658	Cakbi
13 825	Slide Bar	1	P-14131	Cakel
13 827	Gage Plate Anchor Rod	1	M-14133	Cakho

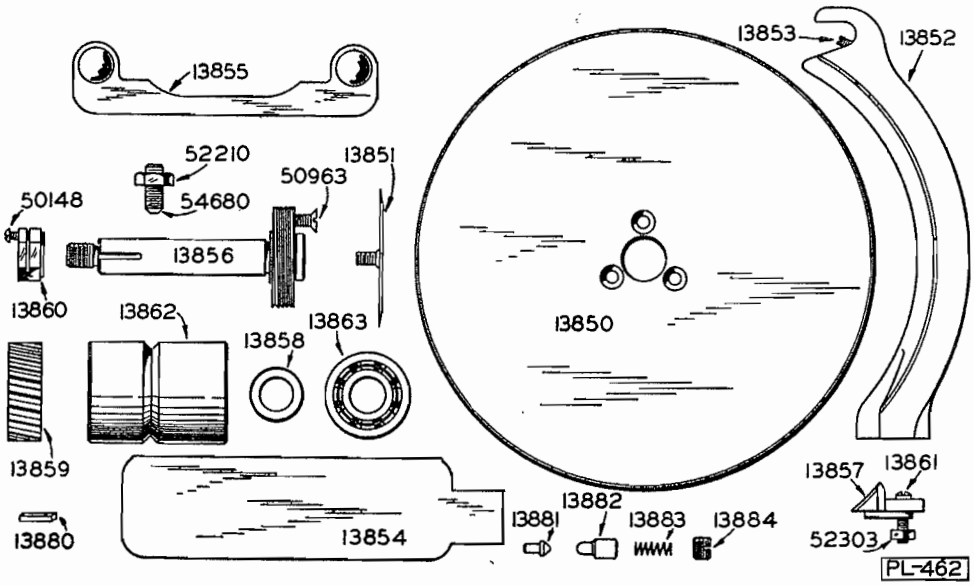

Parts for Knife, Gears and Guards Unit

Catalog No.	Name of Part	No. Req.	Factory No.	Code Word
13 850	Knife	1	S-14125	Camdl
13 851	Cover Disc for Knife	1	P-15688	Camem
13 852	Rear Knife Guard	1	R-14119	Camfn
13 853	Adjusting Screw for No. 13852	1	V-14238	Camgo
13 854	Lower Knife Guard	1	P-14117	Camiq
13 855	Upper Knife Guard	1	M-14568	Camks
13 856	Knife Shaft	1	P-14214	Cammu
13 857	Rear Knife Guard Bracket	1	M-14120	Camow
13 858	Knife Shaft Collar	1	V-14207	Camqy
13 859	Spiral Gear, 26 Teeth	1	M-14201	Camsa
13 860	Retaining Nut	1	V-13172	Camuc
13 861	Retaining Screw for No. 13857	1	V-14128	Camwe
13 862	Bearing Retainer	1	M-14199	Camyg
13 863	Ball Bearing on Knife Shaft	2	--------	Camzh
13 880	Key for No. 13859	1	R-12430-6	Caoaj
13 881	Guard Retainer	1	V-14599	Caobk
13 882	Plunger	1	V-14597	Caocl
13 883	Spring for No. 13882	1	V-14619	Caodm
13 884	Plunger Retainer	1	V-14598	Caoen

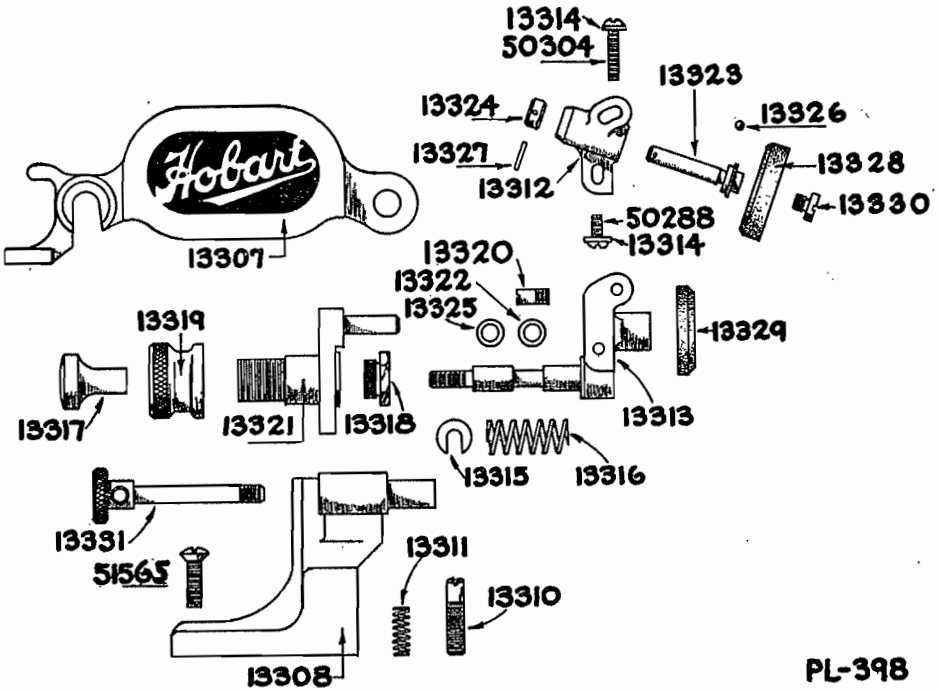

Knife Sharpener Unit

Catalog No.	Part Name	No. Req.	Factory No.	Code Word
13 307	Grinder Housing	1	S-13202	Byeze
13 308	Grinder Housing Pedestal	1	S-13203	Byfas
13 310	Screw for Height Adjustment	1	V-13284	Byfdv
13 311	Spring for No. 13310	1	V-10755-1	Byfew
13 312	Grinding Wheel Carrier	1	P-14434	Byfgy
13 313	Truing Wheel Carrier with Shaft	1	R-14433	Byfia
13 314	Washer (15/64" ID x ½" OD x 1/16" Thk.)	2	----------	Byfme
13 315	Special "U" Washer	2	V-13194	Byfog
13 316	Spring	1	V-5490	Byfph
13 317	Knob for Pull Rod	1	V-13196	Byfqi
13 318	Bushing	1	V-13193	Byfsk
13 319	Thumb Nut	1	M-13220	Byftl
13 320	Stud	1	V-5014	Byfum
13 321	Wheel Carrier Guide	1	P-13224	Byfwo
13 322	Washer (17/64" ID x 15/32" OD x 1/64" Thk.)		----------	Byfyq
13 323	Shaft for Grinding and Truing Wheels	2	V-13197	Byfzr
13 324	Collar for Grinding and Truing Wheel Shaft	2	V-13199	Bygag
13 325	Washer 15/32" x .257" x 1/16"	1	V-10764	Bygbh
13 326	⅛" Dia. Steel Ball	18	----------	Bygci
13 327	Groov-pin No. 0000 Type GG-P-1 (½" lg.)	2	----------	Bygdj
13 328	Grinding Wheel	1	M-13200	Bygek
13 329	Truing Wheel	1	M-13201	Bygfl
13 330	Special Screw for Grinding Wheels	2	V-3404-3	Byggm
13 331	Knurled Thumb Screw At Side	2	V-13219	Bygio

2701-B

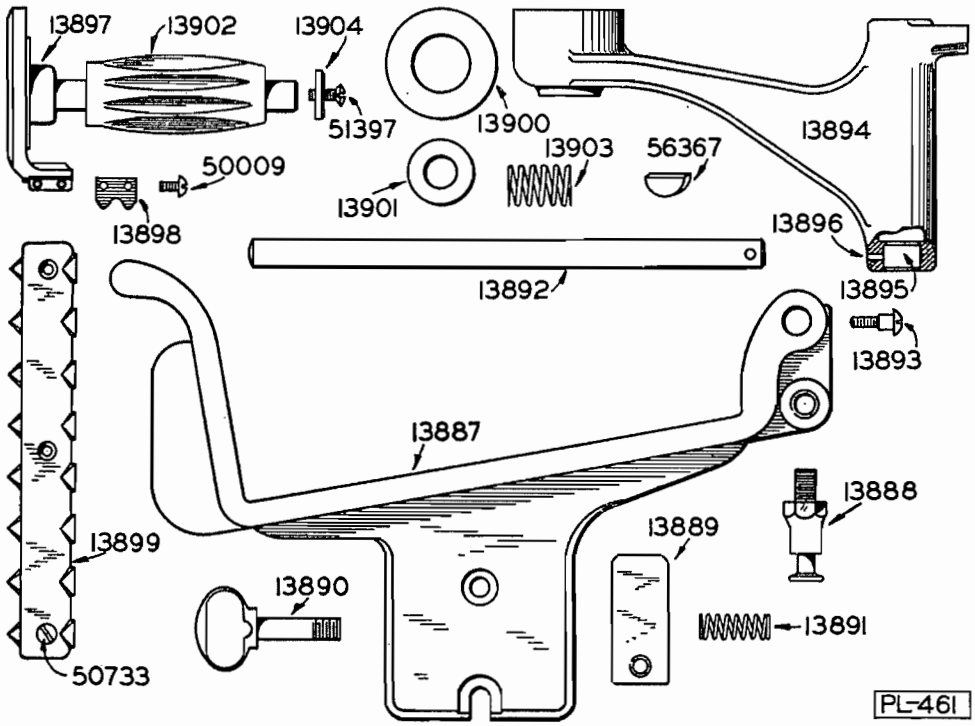

Parts for Carriage Unit

(Previous to Specification 3441)

Catalog No.	Name of Part	No. Req.	Factory No.	Code Word
13 887	Carriage Tray	1	T-14122	Caohq
13 888	Stop for Carriage Tray Arm	1	M-13215	Caoir
13 889	Clamp Bar	1	V-14136	Caojs
13 890	Thumb Screw	1	M-14137	Caokt
13 891	Spring for Clamp Bar	1	V-7009	Caolu
13 892	Slide Rod for Carriage Tray Arm	1	V-14194	Caomv
13 893	Special Screw for No. 13892	1	V-14569	Caonw
13 894	Carriage Tray Arm	1	S-14121	Caoox
13 895	Bushing for No. 13894	2	V-10950	Caopy
13 896	Pin for No. 13895	2	P-11800-14	Caoqz
13 897	Meat Grip and Shaft	1	S-14188	Caora
13 898	Meat Grip Slide	2	V-13900	Caosb
13 899	Bottom for Meat Grip	1	P-14277	Caotc
13 900	Fibre Washer, Large Size	1	V-14615	Caoud
13 901	Fibre Washer, Small Size	1	V-13191	Caove
13 902	Carriage Handle	1	M-13180	Caowf
13 903	Spring for No. 13902	1	V-10818	Caoxg
13 904	Washer for No. 13902	1	V-10949	Caoyh

2717

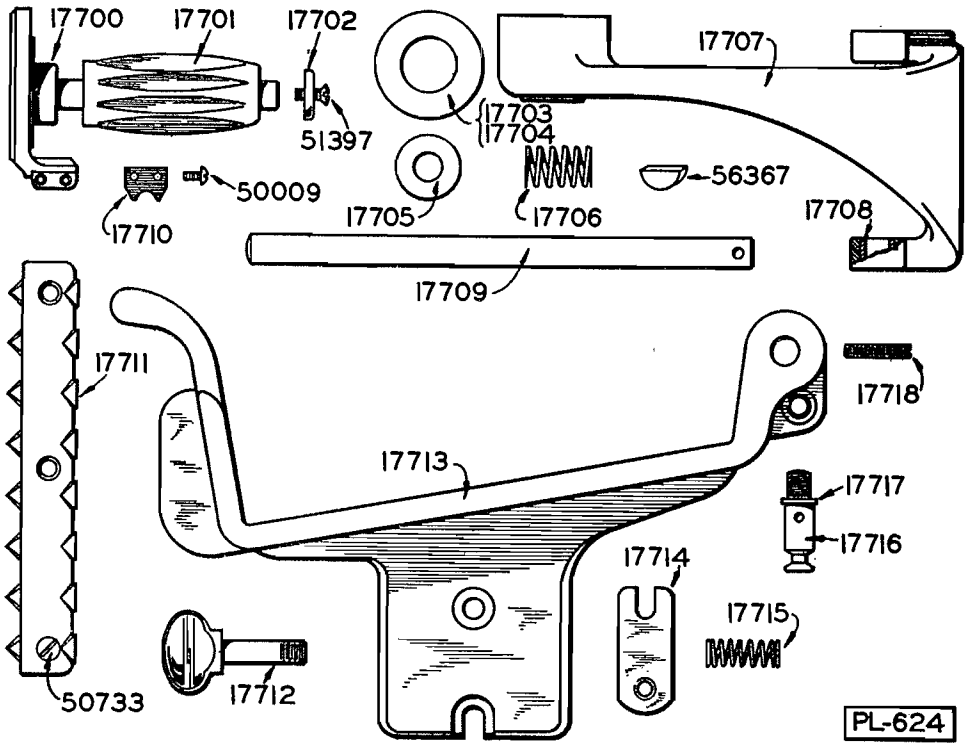

Parts for Carriage Unit

(Specification 3441 and Later)

Catalog No.	Name of Part	No. Req.	Factory No.	Code Word
17 700	Meat Grip and Shaft	1	S-14188	Dayod
17 701	Carriage Handle	1	M-13180	Daype
17 702	Washer for Carriage Handle	1	V-10949	Dayqf
17 703	Fibre Washer, large size, 1/16" thick	---	M-17000-13-6	Dayrg
17 704	Fibre Washer, large size, 1/32" thick	---	M-17000-13-5	Daysh
17 705	Fibre Washer, small size, 1/32"thick	1	M-17000-8-17	Dayti
17 706	Spring for Carriage Handle	1	V-10818	Dayuj
17 707	Carriage Arm (Complete with Bushings)	1	S-16885	Dayvk
17 708	Carriage Arm Bushing, only	2	V-16886	Daywl
17 709	Slide Rod	1	V-14194	Dayxm
17 710	Meat Grip Slide	2	V-13900	Dayyn
17 711	Bottom for Meat Grip	1	P-14277	Dayzo
17 712	Thumb Screw	1	M-14137	Dazac
17 713	Carriage Tray	1	T-16882	Dazbd
17 714	Clamp Bar	1	V-16887	Dazce
17 715	Spring for Clamp Bar	1	V-16888	Dazeg
17 716	Stop for Carriage Arm	1	V-16883	Dazgi
17 717	Spacing Washer for No. 17716	1	M-17000-6-34	Dazhj
17 718	No. 10-24 x 1" Electro Tinned, Headless, Cup Point Set Screw	1	-------	Dazik

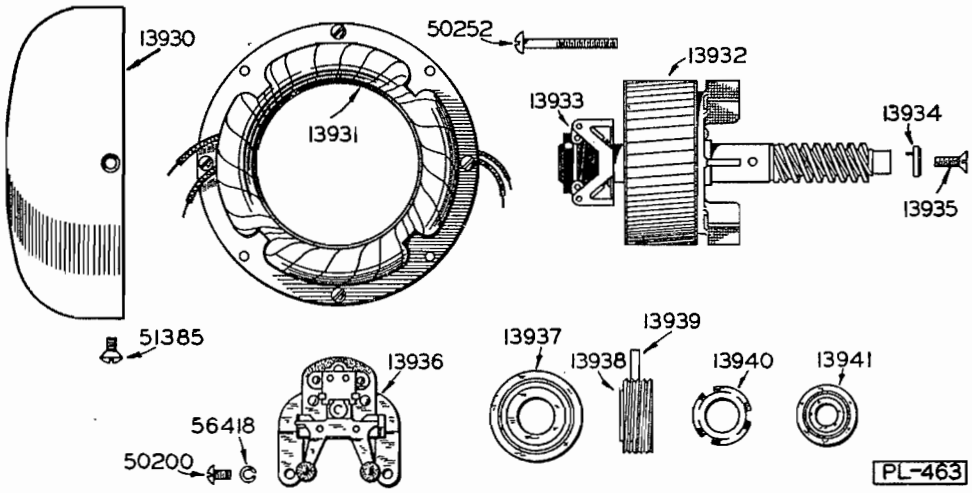

Parts for AFB-110 Alternating Current Motor

Catalog No.	Name of Part	No. Req.	Factory No.	Code Word
13 930	Motor End Cover	1	P-15648	Carax
13 931	Stator Unit wired Complete. Give Elec. Spec.	1	R-15635	Carby
13 932	Rotor complete with Starting Switch. Give Elec. Spec.	1	R-15635	Carcz
13 933	Starting Switch on Rotor Shaft	1	--------	Carda
13 934	Special Washer on Rotor Shaft at Gear End	1	V-14205	Careb
13 935	No. 10-32 x ⅝" Flat Head Screw for No. 13934	1	--------	Carhe
13 936	Starting Switch in Motor End Cover	1	--------	Carif
13 937	Ball Bearing. Large Size near Grease Conveyor	1	77504	Carkh
13 938	Grease Conveyor	1	M-15586	Carli
13 939	Special Pin for No. 13938	1	V-15875	Carol
13 940	Finger Spring for No. 13941	1	V-15657	Carro
13 941	Ball Bearing. Small Size at Gear End	1	77501	Carsp

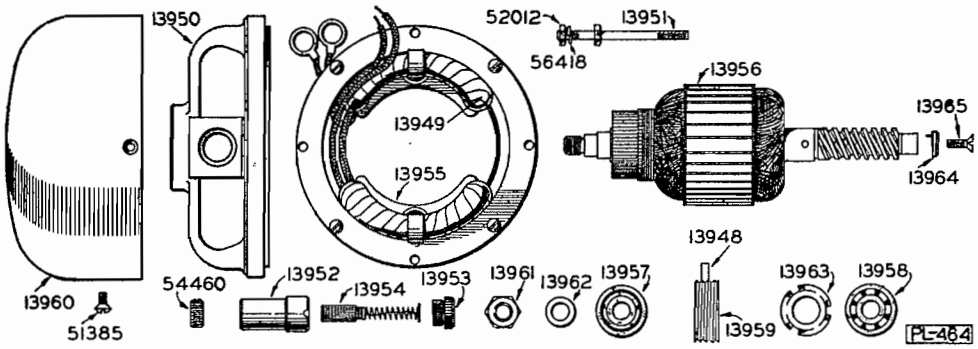

Parts for DFA-110 Direct Current Motor

Catalog No.	Name of Part	No. Req.	Factory No.	Code Word
13 948	Pin for Grease Conveyor	1	V-15875	Casdo
13 949	Field Coil Only. State Voltage	2	--------	Casep
13 950	Bearing Bracket	1	R-14705	Casgr
13 951	Special Stud	4	V-14704	Casit
13 952	Brush Cartridge	2	--------	Casju
13 953	Cap for Cartridge	2	--------	Casny
13 954	Brush with Terminal and Spring	2	--------	Casoz
13 955	Stator Unit wired complete. State Voltage	1	R-15652	Caspa
13 956	Armature assembled. State Voltage	1	R-15652	Cassd
13 957	Ball Bearing at Commutator End	1	--------	Caste
13 958	Ball Bearing at Gear End	1	--------	Casuf
13 959	Grease Conveyor	1	M-15654	Caswh
13 960	Motor End Cover	1	P-15637	Casxi
13 961	Special Nut for Armature Shaft	2	V-11430	Casyj
13 962	Washer for Armature Shaft	1	V-11442	Catay
13 963	Finger Spring for No. 13958	1	V-15657	Catca
13 964	Special Motor Shaft Washer at Gear End	1	V-14205	Catec
13 965	No. 10-32 x ⅝" Flat Head Screw for No. 13964	1	--------	Catge

Commercial Stock for No. 110 Meat Slicer

Catalog No.	Description	Material	No. Req.	Code Word
50 009	No. 4-40 x ¼" Round Head Machine Screw	Plated	4	Ixynk
50 148	No. 8-32 x ½" Round Head Machine Screw	Steel	1	Iygym
50 200	No. 10-24 x ¼" Round Head Machine Screw	Steel	2	Iykuj
50 207	No. 10-24 x 5/16" Round Head Machine Screw	Elec. Tin	4	Iylgi
50 252	No. 10-24 x 2" Round Head Machine Screw	Steel	4	Iyoev
50 288	No. 12-24 x ½" Round Head Machine Screw	Steel	1	Iyqdv
50 304	No. 12-24 x 1" Round Head Machine Screw	Steel	1	Iyrdi
50 363	¼-20 x ½" Round Head Machine Screw	Elec. Tin	1	Iyuvp
50 439	5/16-18 x ⅞" Round Head Machine Screw	Elec. Tin	3	Izair
50 733	No. 8-32 x 5/16" Flat Head Cap Screw	Plated	3	Izsyq
50 959	¼-20 x ½" Flat Head Cap Screw	Elec. Tin	2	Jagco
50 963	¼-20 x ⅝" Flat Head Cap Screw	Elec. Tin	3	Jagkw
50 965	¼-20 x ¾" Flat Head Cap Screw	Plated	3	Jagnz
51 253	No. 6-32 x ¼" Oval Csk. Head Machine Screw	Plated	2	Jaycx
51 329	No. 8-32 x ⅜" Oval Csk. Head Machine Screw	Steel	4	Jebsk
51 385	No. 10-24 x 5/16" Oval Csk. Head Machine Screw	Plated	4	Jeeub
51 397	No. 10-24 x ½" Oval Csk. Head Machine Screw	Plated	1	Jefsm
51 549	¼-20 x ½" Oval Csk. Head Machine Screw	Plated	2	Jeowi
51 565	¼-20 x 1" Oval Csk. Head Machine Screw	Plated	2	Jepyx
52 012	No. 10-24 Hexagon Nut	Steel	4	Jiqud
52 107	5/16-18 Hexagon Nut	Elec. Tin	1	Jiwwi
52 207	5/16-18 Hexagon Jam Nut	Elec. Tin	1	Joden
52 210	⅜-16 Hexagon Jam Nut	Brass	1	Jodkt
52 211	⅜-16 Hexagon Jam Nut	Elec. Tin	1	Jodlu
52 303	¼-20 Nut. ½" square and 3/16" thick	Elec. Tin	1	Joirq
52 767	5/16-18 x ¾" Hexagon Head Cap Screw	Elec. Tin	3	Julah
52 783	5/16-18 x 1½" Hexagon Head Cap Screw	Elec. Tin	1	Jumbw
52 823	⅜-16 x 1" Hexagon Head Cap Screw	Elec. Tin	4	Juolh
54 460	5/16-18 x ½" Headless Screw Cup Point	Steel	2	Kiatv
54 680	⅜-16 x ⅞" Hollow Screw Cup Point	Steel	1	Kiowf
56 155	3/32" Dia. Cotter Pin 1¼" long	Brass	1	Ktujk
56 367	No. 405 Woodruff Key	Steel	1	Kujho
56 418	No. 10 Lockwasher 3/32" x 3/64"	Steel	6	Kumcy
56 436	5/16" Lockwasher ⅛" x 1/16"	Steel	6	Kunen
56 442	⅜" Lockwasher ⅛" x 1/16"	Steel	4	Kunpy

Instructions for Ordering

When ordering replacement parts always give the SERIAL NUMBER of the machine for which the parts are required.

Order by CATALOGUE NUMBER using the illustrations to identify the parts. Do not use the factory numbers, they are for our convenience only. If motor parts are wanted, give electrical specifications also.

The code words may be used to save expense when telegraphing.

INSTRUCTIONS (Continued)

(C) Adjusting Slice Deflector Clearance The slice deflector should come within a thirty-second of an inch from the back of the knife. If it does not, adjustment can be made by turning the slotted head of the stop screw that lies behind the deflector.

(D) To Adjust for Wear of the Knife Repeated sharpening will wear down the diameter of the knife and as the diameter becomes less three adjustments will be needed.

1 — Move the gage plate over nearer to the knife. To do this, loosen the three screws R, half a turn, give the outer edge of the gage plate a few light taps to move it nearer the knife, and then tighten screws R again. (Fig. 1)

2 — Move the rear guard nearer the knife. To do this, take the guard off and screw the stop stud S down a little (See Fig. 4). Then loosen screw T and move the block U nearer the knife.

3 — Let down the grinding wheels. Lift up the cover N, loosen the nut 14, and remove the grinder unit. Then screw down the adjustment 26 until the cutting edge of the knife is a sixteenth of an inch higher than the inner rim of the grinding wheel, as shown in Fig. 2.

After the knife has worn down a quarter of an inch in diameter loosen the two screws that hold the grinding wheel support and change the angle of tilt slightly to shorten the bevel on the knife edge.
When the knife has worn down to about 9½″ in diameter replace it with a new one.

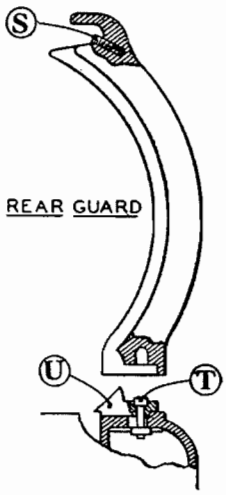

Fig. 4

(E) To Tighten Slice Adjustment, turn screw W, Fig. 3.

8 — REPAIRS Replacement parts may be ordered from this book. Always give the serial number of the machine for which the parts are wanted, and order by catalogue number. The code words may be used to save expense when telegraphing.

We congratulate you upon the acquisition of this fine piece of equipment and we want you to get the best possible service from it. If there is any point about the care or operation of your machine that has not been made clear, or if you wish further information, do not hesitate to call upon our nearest service office or write to the factory.

THE HOBART MANUFACTURING CO.

TROY, OHIO, U. S. A.